FOUR POST LIFT
PK15-4-202-S-DT

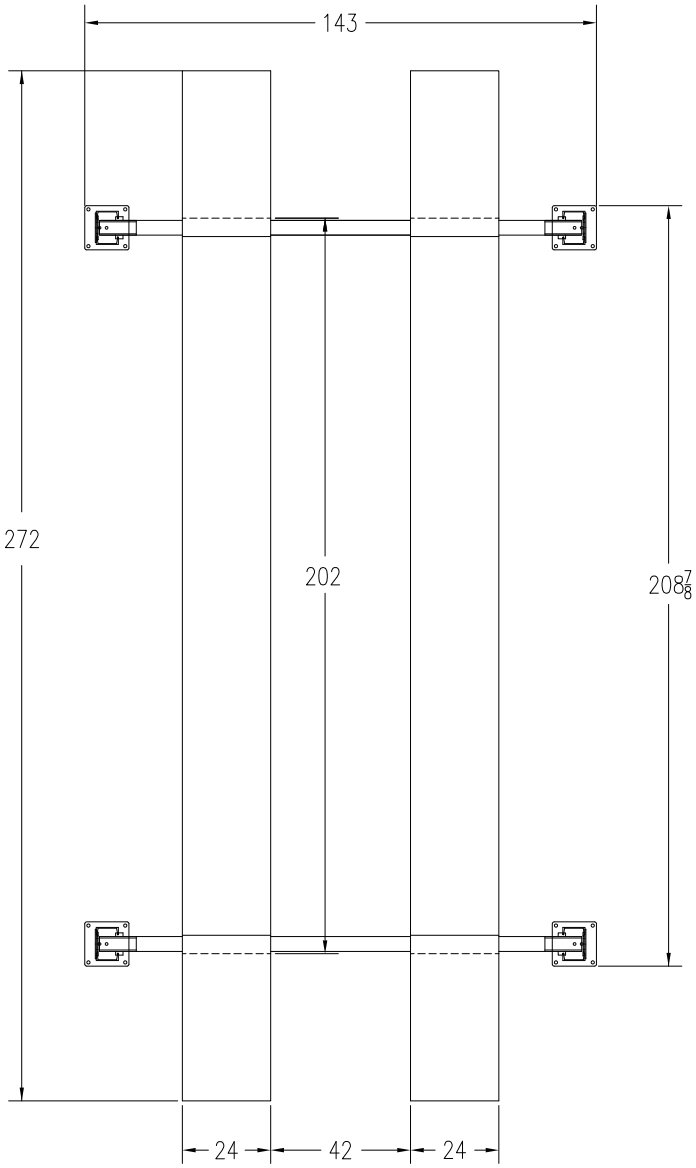

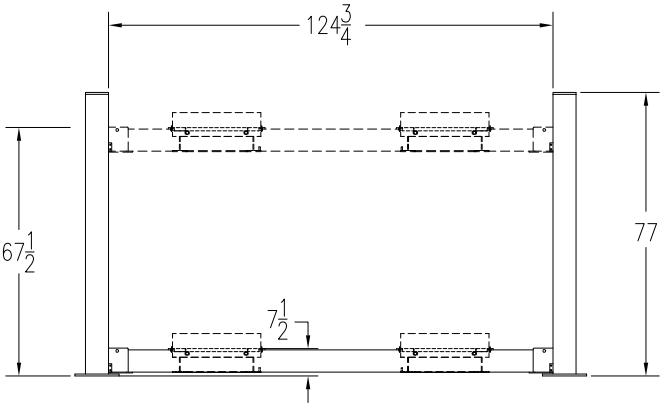

FRONT VIEW

SPECIFICATION

CAPACITY	15,000 LBS	RUNWAY LENGTH	202"
WHEELBASE	178"	RUNWAY HEIGHT	7-1/2"
INSIDE COLUMN CLEARANCE	124-3/4"	RUNWAY WIDTH	24"
MECHANICAL SAFETY LOCK ON EACH COLUMN		OVERALL HEIGHT	77"
ELECTRICAL 2HP 208-230 V, SINGLE PHASE		OVERALL WIDTH	143"
OPTIONAL 208-230 V, 3PH		OVERALL LIFTING HEIGHT	67-1/2"
SPEED OF RISE	60 SEC.	OPTIONAL - ROLLING JACKING BEAM	

P K S	NOV.22/2010	DWG FIG.01-202DT	A

FOUR POST LIFT
PK15-4-226-S-DT

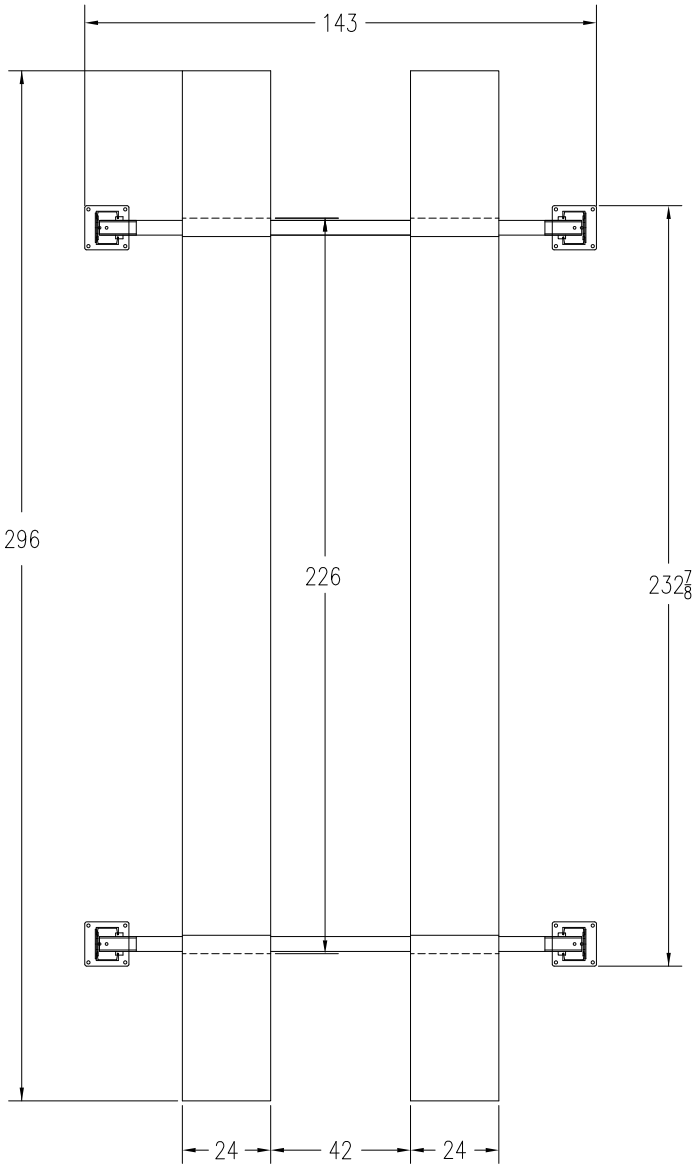

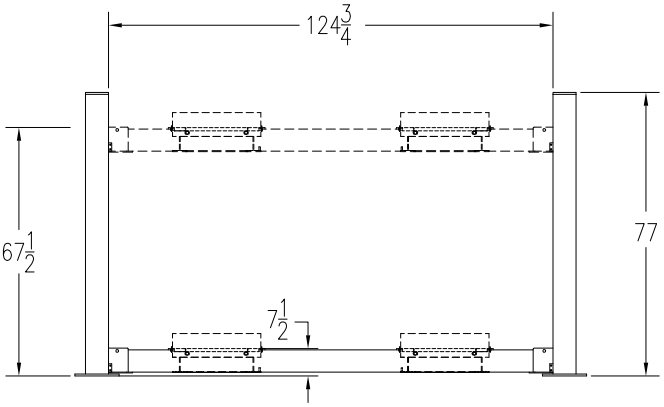

FRONT VIEW

SPECIFICATION

CAPACITY	15,000 LBS	RUNWAY LENGTH	226"
WHEELBASE	202"	RUNWAY HEIGHT	7-1/2"
INSIDE COLUMN CLEARANCE	124-3/4"	RUNWAY WIDTH	24"
MECHANICAL SAFETY LOCK ON EACH COLUMN		OVERALL HEIGHT	77"
ELECTRICAL 2HP 208-230 V, SINGLE PHASE		OVERALL WIDTH	143"
OPTIONAL 208-230 V, 3PH		OVERALL LIFTING HEIGHT	67-1/2"
SPEED OF RISE	60 SEC.	OPTIONAL - ROLLING JACKING BEAM	

P K S	NOV.22/2010	DWG FIG.01-226DT	A

SPECIFICATION		
CAPACITY	15,000 LBS	
FOUR COLUMNS C/W SAFETY DEVICES (MECHANICAL/AIR)		
POWER UNIT C/W EL. MOTOR	STANDARD	2HP, 1PH, 230V
	OPTIONAL	2HP, 3PH, 230/460V
ALIGNMENT RUNWAY 2 PCS	SPEED OF RISE	60 SEC.
	LENGTH	202" (226")
	WIDTH	24"
	HEIGHT	7-1/8"
	WHEELBASE	178"
	LIFTING HEIGHT	67-1/2"
INSIDE COLUMN CLEARANCE	124-3/4"	
OVERALL	HEIGHT	77"
	WIDTH	143"
	LENGTH	240-1/2"
OPTIONAL - ROLLING JACKING BEAM		

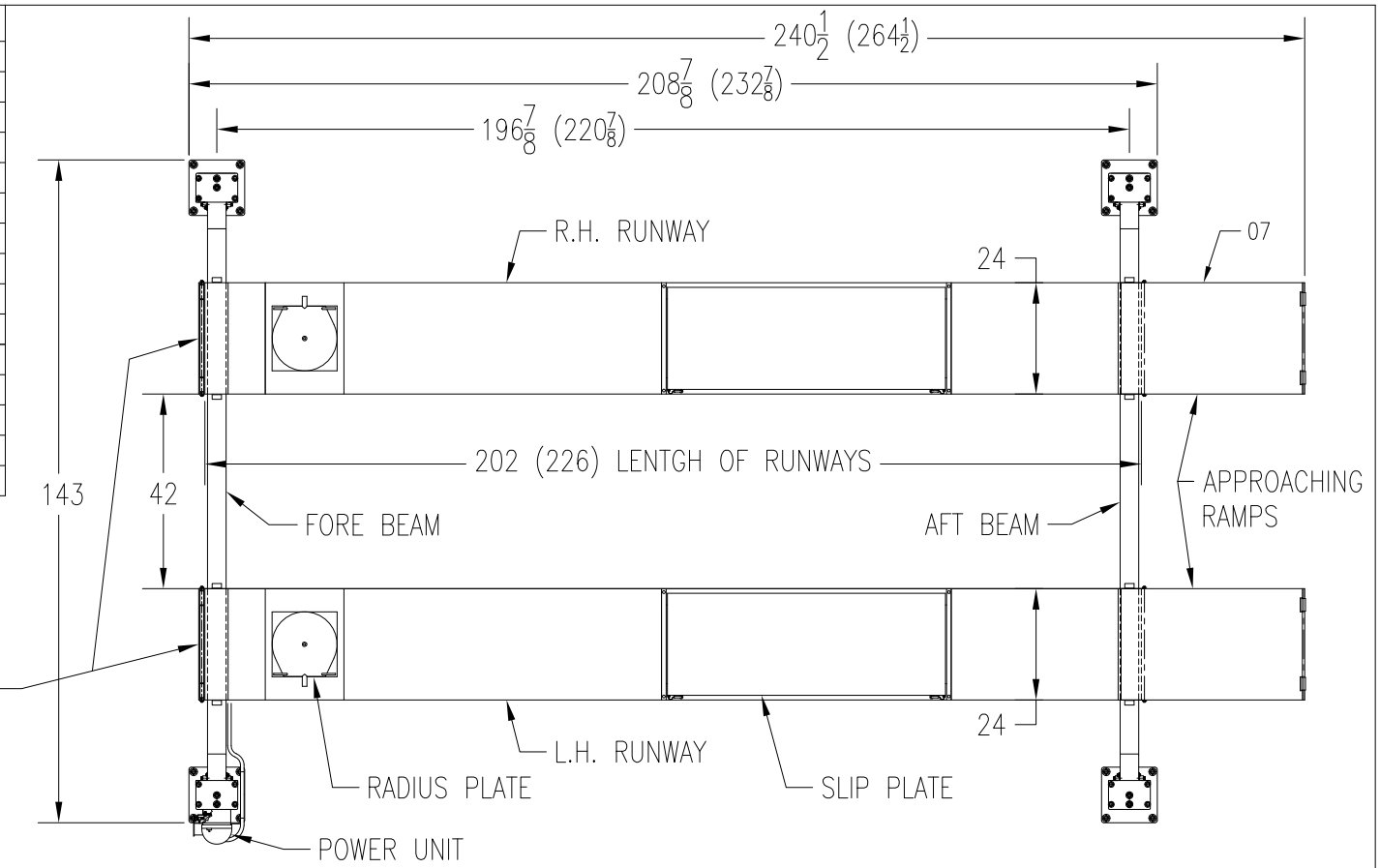

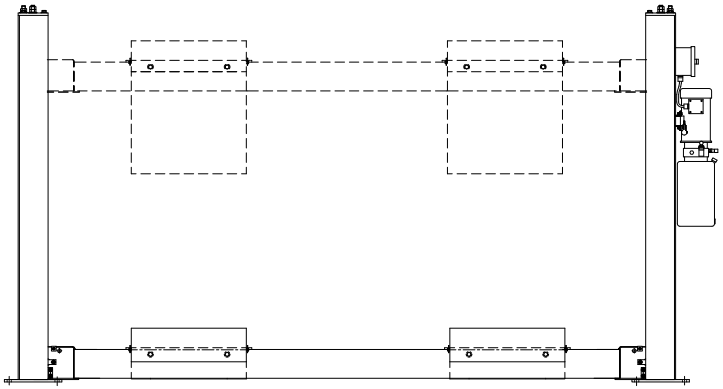

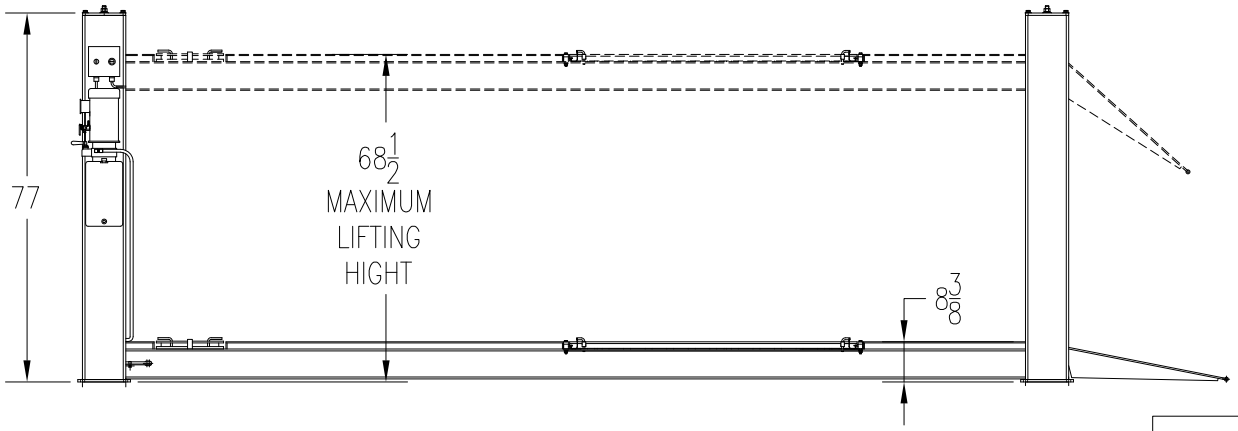

FIG.01

P K S	4-POST LIFTS SPECIFICATION	MODEL: PK-15-4-A	DATE: JULY 14/2011	DWG.NO. PK15.4.S.01	A

SPECIFICATION		
CAPACITY	15,000 LBS	
FOUR COLUMNS C/W SAFETY DEVICES (MECHANICAL/AIR)		
POWER UNIT C/W EL. MOTOR	STANDARD	2HP, 1PH, 230V
	OPTIONAL	2HP, 3PH, 230/460V
RUNWAY 2 PCS	SPEED OF RISE	60 SEC.
	LENGTH	202" (226")
	WIDTH	24"
	HEIGHT	7-1/8"
	WHEELBASE	178"
	LIFTING HEIGHT	67-1/2"
INSIDE COLUMN CLEARANCE	124-3/4"	
OVERALL	HEIGHT	77"
	WIDTH	143"
	LENGTH	240-1/2"
OPTIONAL - ROLLING JACKING BEAM		

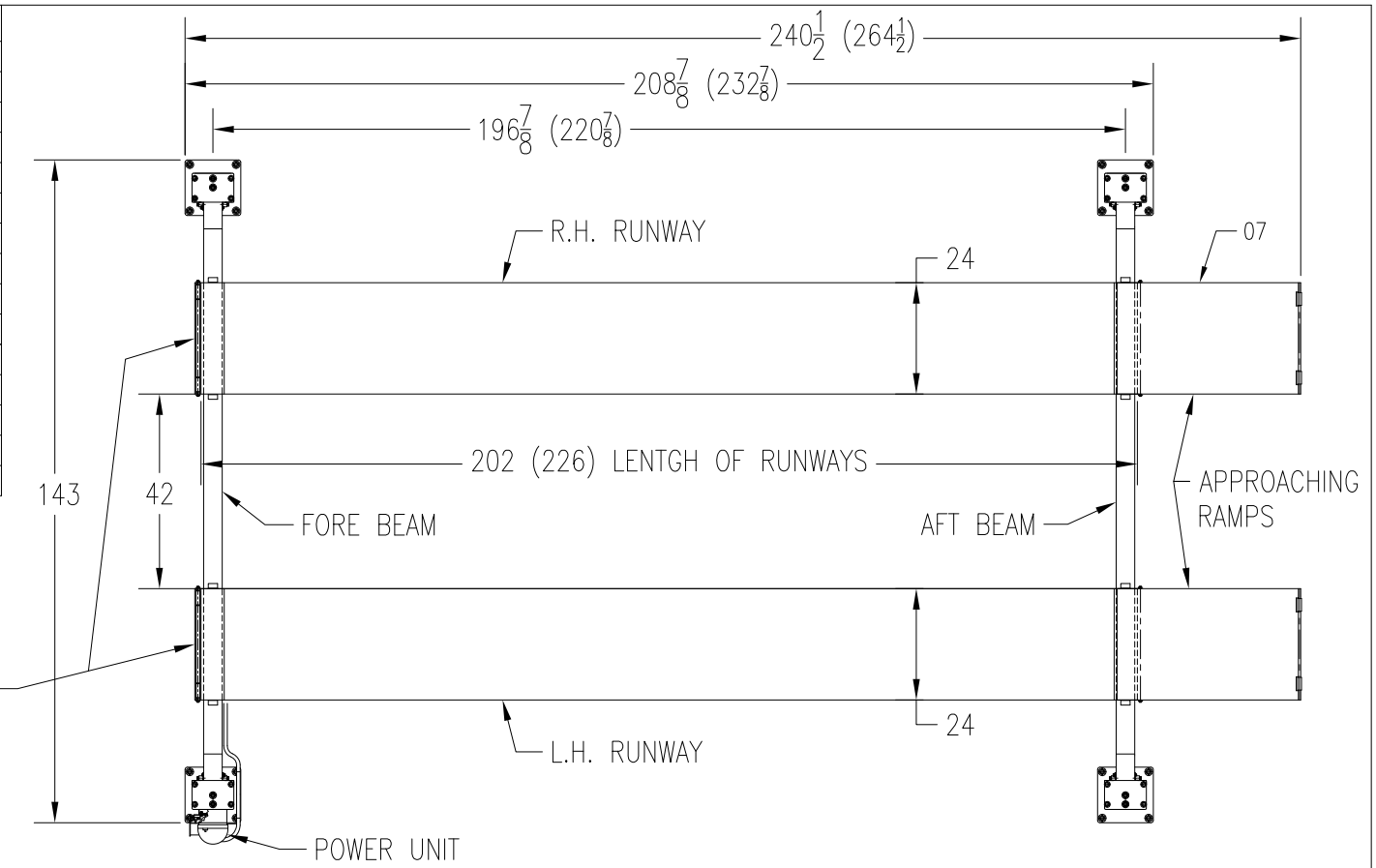

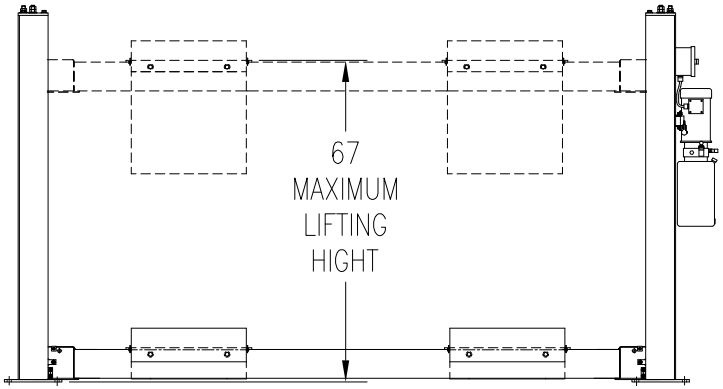

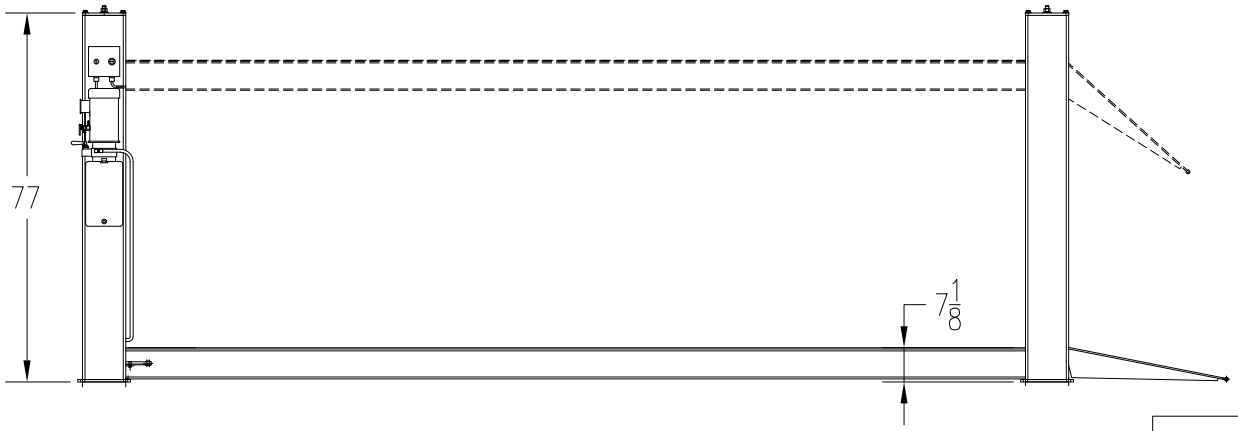

FIG.01

P K S	4-POST LIFTS SPECIFICATION	MODEL: PK-15-4-S	DATE: JULY 14/2011	DWG.NO. PK15.4.S.01	A

FOUR POST LIFT
PK18-4-202-S-DT

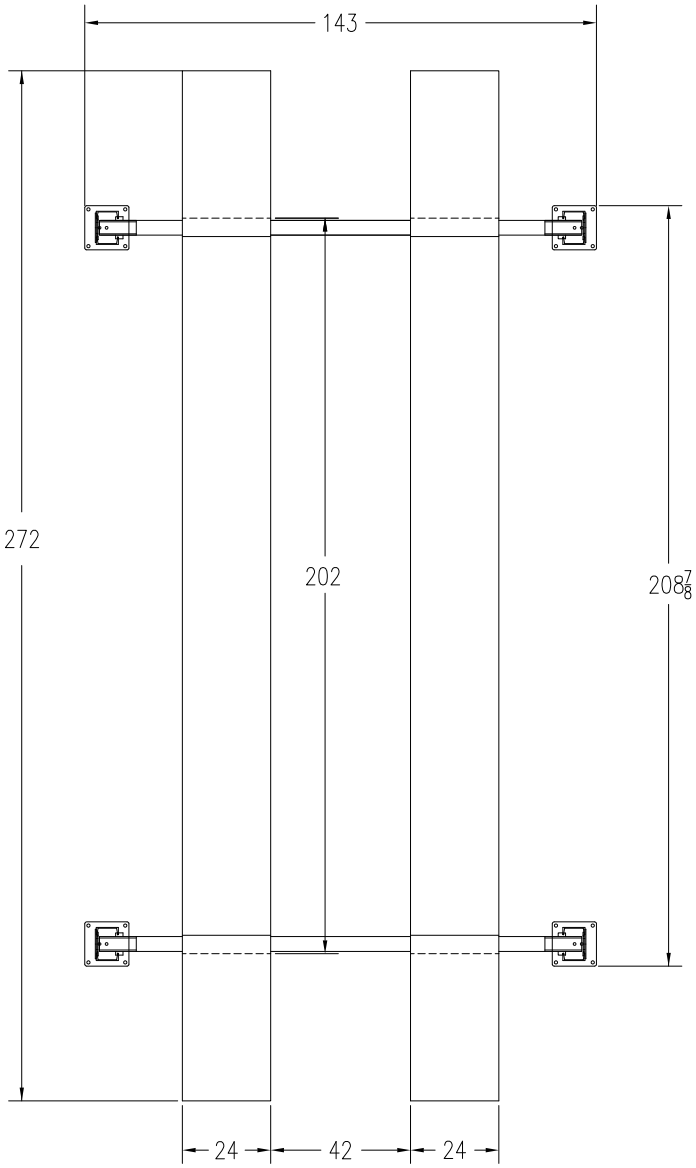

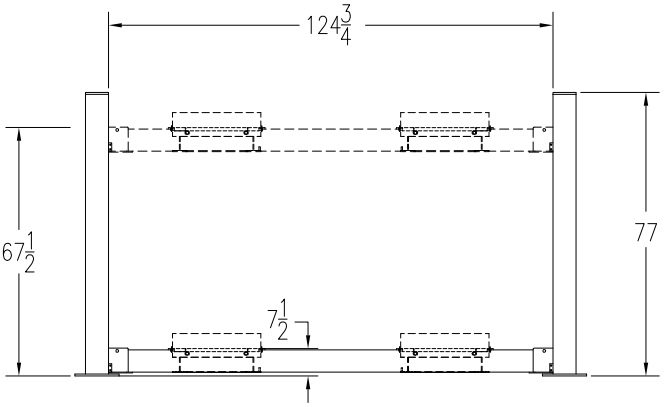

FRONT VIEW

SPECIFICATION

CAPACITY	18,000 LBS	RUNWAY LENGTH	202"
WHEELBASE	178"	RUNWAY HEIGHT	7-1/2"
INSIDE COLUMN CLEARANCE	124-3/4"	RUNWAY WIDTH	24"
MECHANICAL SAFETY LOCK ON EACH COLUMN		OVERALL HEIGHT	77"
ELECTRICAL 2HP 208-230 V, SINGLE PHASE		OVERALL WIDTH	143"
OPTIONAL 208-230 V, 3PH		OVERALL LIFTING HEIGHT	67-1/2"
SPEED OF RISE	60 SEC.	OPTIONAL - ROLLING JACKING BEAM	

P K S	NOV.22/2010	DWG FIG.01-202DT	A

FOUR POST LIFT
PK18-4-226-S-DT

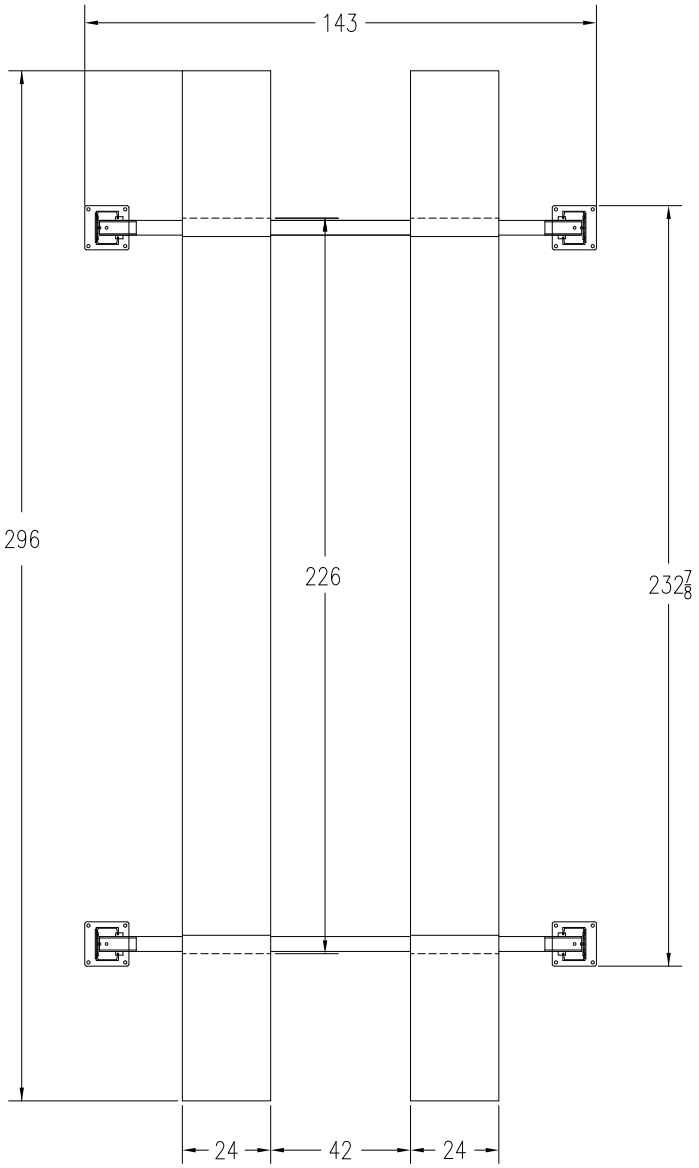

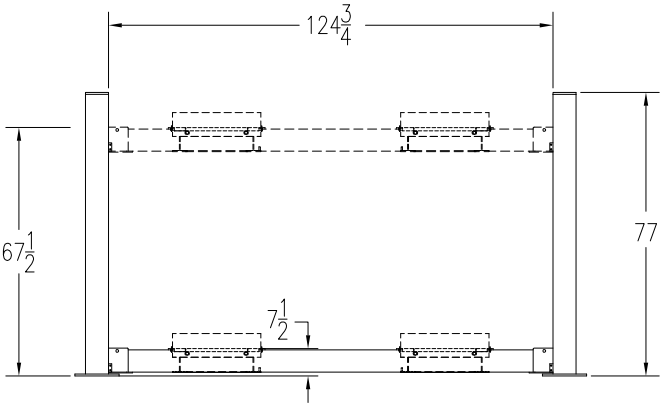

FRONT VIEW

SPECIFICATION

CAPACITY	18,000 LBS	RUNWAY LENGTH	226"
WHEELBASE	202"	RUNWAY HEIGHT	7-1/2"
INSIDE COLUMN CLEARANCE	124-3/4"	RUNWAY WIDTH	24"
MECHANICAL SAFETY LOCK ON EACH COLUMN		OVERALL HEIGHT	77"
ELECTRICAL 2HP 208-230 V, SINGLE PHASE		OVERALL WIDTH	143"
OPTIONAL 208-230 V, 3PH		OVERALL LIFTING HEIGHT	67-1/2"
SPEED OF RISE	60 SEC.	OPTIONAL - ROLLING JACKING BEAM	

P K S	NOV.22/2010	DWG FIG.01-226DT	A

SPECIFICATION		
CAPACITY	18,000 LBS	
FOUR COLUMNS C/W SAFETY DEVICES (MECHANICAL/AIR)		
POWER UNIT C/W EL. MOTOR	STANDARD	2HP, 1PH, 230V
	OPTIONAL	2HP, 3PH, 230/460V
ALIGNMENT RUNWAY 2 PCS	SPEED OF RISE	60 SEC.
	LENGTH	202" (226")
	WIDTH	24"
	HEIGHT	7-1/8"
	WHEELBASE	178"
	LIFTING HEIGHT	67-1/2"
INSIDE COLUMN CLEARANCE	124-3/4"	
OVERALL	HEIGHT	77"
	WIDTH	143"
	LENGTH	240-1/2"
OPTIONAL - ROLLING JACKING BEAM		

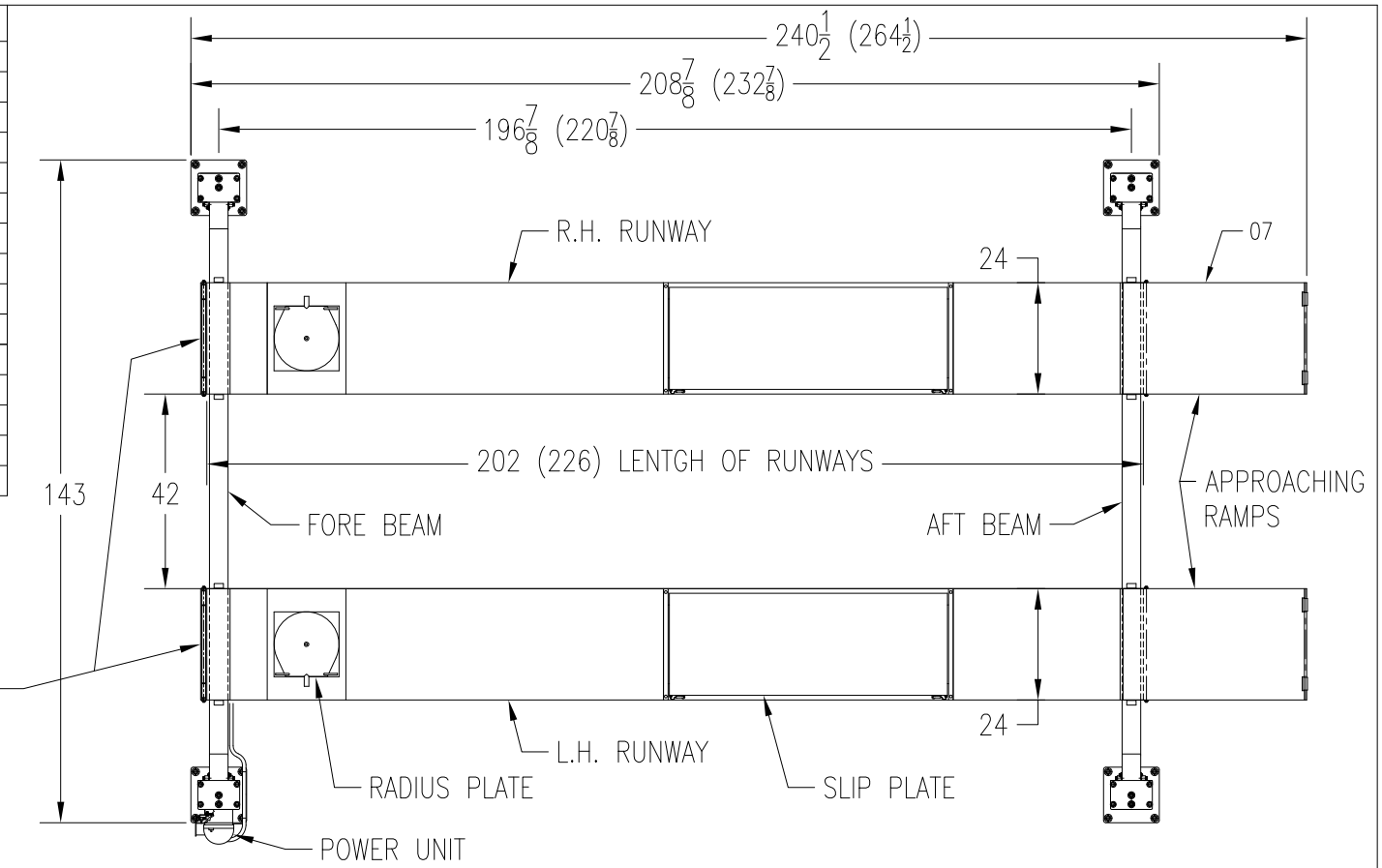

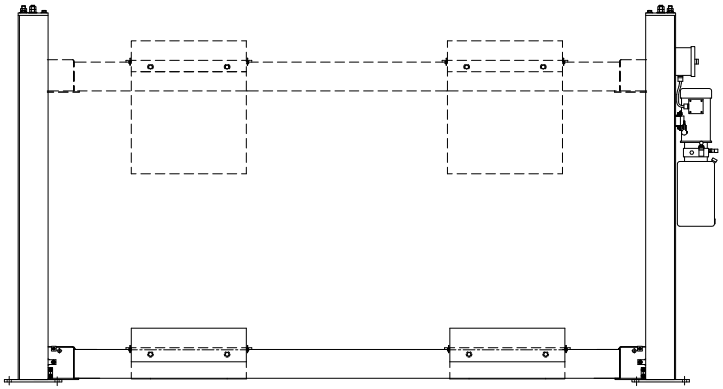

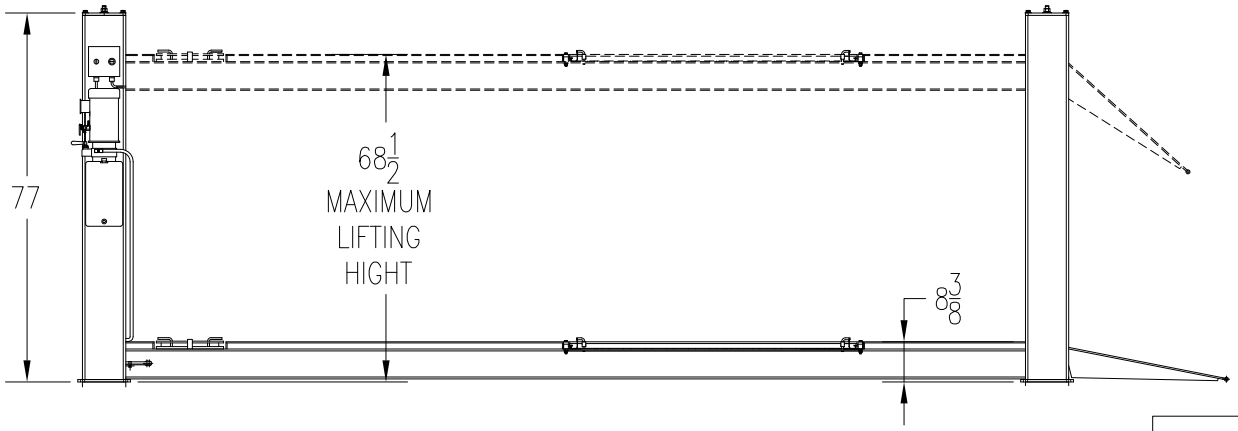

FIG.01

P K S	4-POST LIFTS SPECIFICATION	MODEL: PK-18-4-A	DATE: JULY 14/2011	DWG.NO. PK18.4.A.01	A

SPECIFICATION		
CAPACITY	18,000 LBS	
FOUR COLUMNS C/W SAFETY DEVICES (MECHANICAL/AIR)		
POWER UNIT C/W EL. MOTOR	STANDARD	2HP, 1PH, 230V
	OPTIONAL	2HP, 3PH, 230/460V
RUNWAY 2 PCS	SPEED OF RISE	60 SEC.
	LENGTH	202" (226")
	WIDTH	24"
	HEIGHT	7-1/8"
	WHEELBASE	178"
	LIFTING HEIGHT	67-1/2"
INSIDE COLUMN CLEARANCE	124-3/4"	
OVERALL	HEIGHT	77"
	WIDTH	143"
	LENGTH	240-1/2"
OPTIONAL - ROLLING JACKING BEAM		

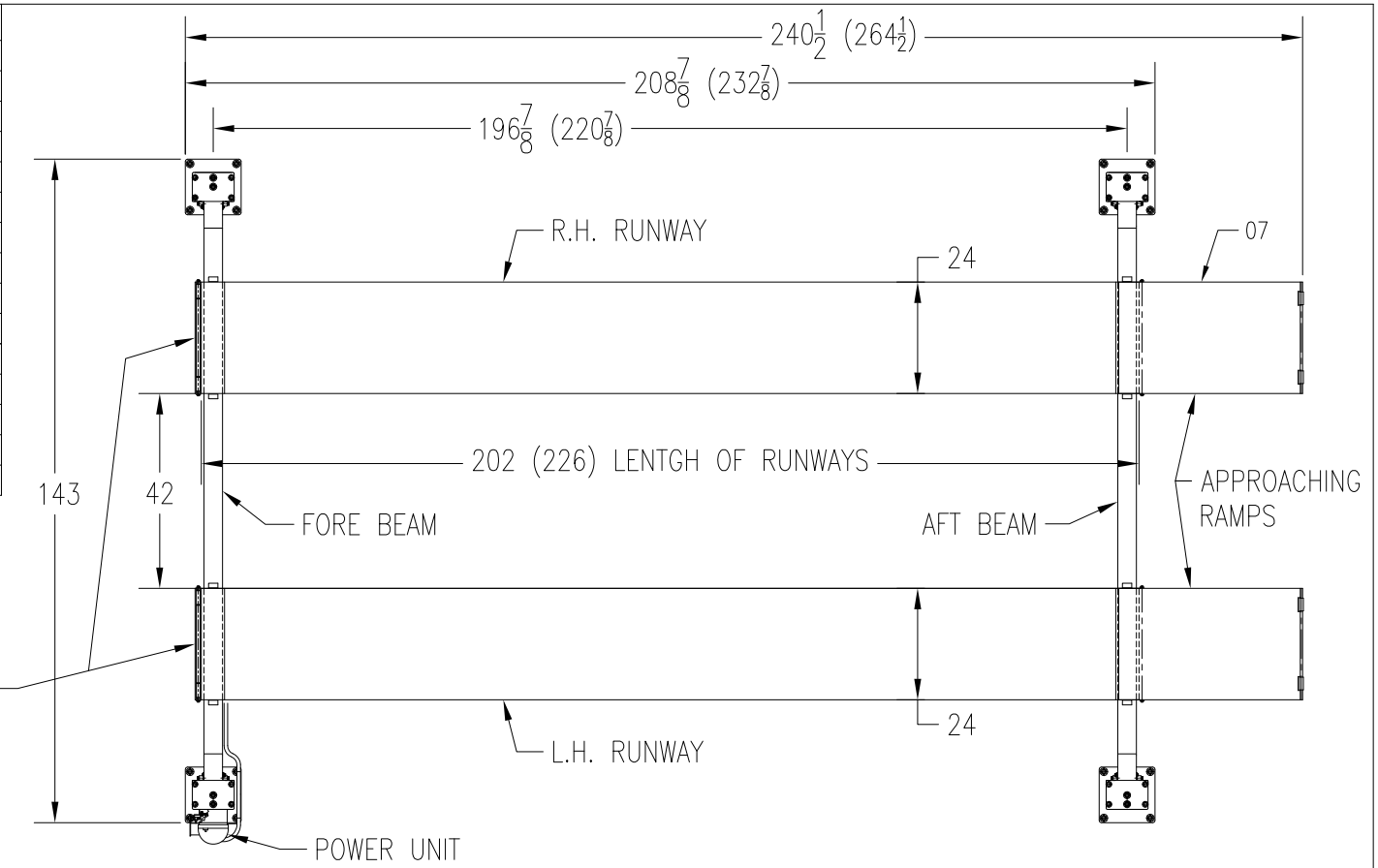

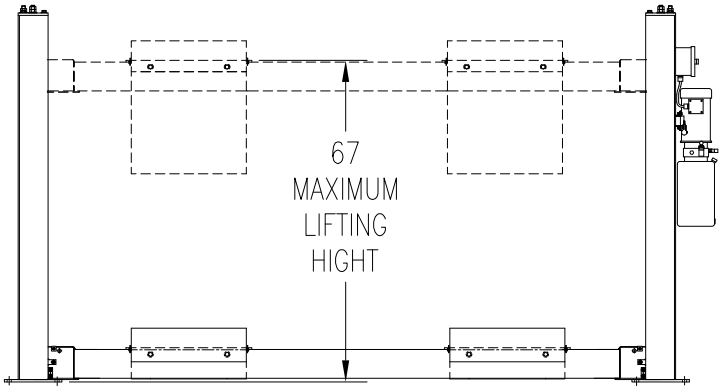

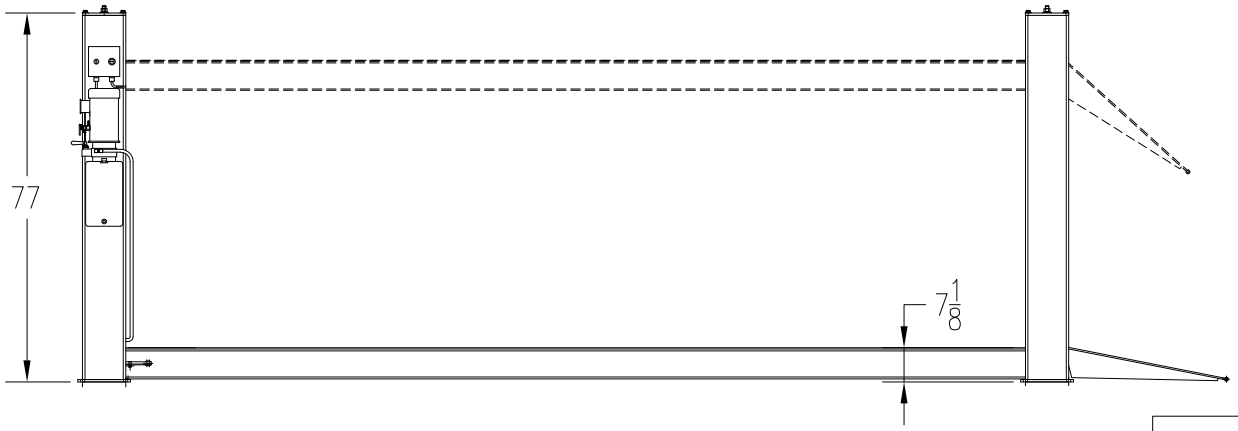

FIG.01

P K S	4-POST LIFTS SPECIFICATION	MODEL: PK-18-4-S	DATE: JULY 14/2011	DWG.NO. PK18.4.S.01	A